OMEGA
Air Cylinders

Air Charger

4500 psi Compressor

Thank you for purchasing **Omega Air Charger compressor** for PCP and carbon fiber tank filling.

Rapidly fill tank sizes from 6 cubic feet to 120 cubic feet . Aircraft machined aluminum is used extensively for internal components, increasing strength and portability. Air-water separation with manual water release comes standard on all units. Shock-resistant pressure gauges with automatic shut-off prevents over-filling .

In addition, all Omega Air Charger compressors use Royal Purple radiator coolants to reduce operating temperatures. The compressor comes with a pre-mixed solution of Purple Ice radiator coolant and anti-freeze .Add purified water to the radiator prior to initial start-up and operation of the compressor. This special mixture maximizes the radiator's cooling efficiency, helping to increase heat exchange by upwards of 30%.

Only the highest quality Bio-based food grade lubricants from Renewable Lubricants are used in the crankshaft and multi-stage high pressure piston chambers. This protects the PCP air tank's inner surface from oxidation while having excellent adhesion/ cohesion properties. Independent control of the compressor motor allows the radiator to continue to function while the motor is not running ensuring and optimizing chamber cool down when extended filling is required.

Omega Air Charger compressors come with the necessary seals and instructions, giving the end-user total control of basic maintenance for a trouble free life of the compressor.

All of these features make the Air Charger from Omega one of the most user-friendly and economical high PSI compressors in the market today, providing years of continued service when properly used and maintained.

Compressor Operation and initial start—up Procedure: Please read directions carefully and follow operating procedures before each use.

Pour the 2 bottles of ICE and coolant (supplied in your kit) in the water tank and fill the rest of the way with water. Approximately 1/2 inch below water flume.

Locate the grease port on top of the compressor and remove the shipping screw. Replace shipping screw with the green extra volume grease head, hand tighten. 1 click (1/3 turn) every 6 hrs of compressor running.

The compressor gauge has 2 needles, push red knob in and move both needles to your desired PSI.

Locate power cord inside the box and insert cord into the compressor power socket. Make sure fan and water pump are operating before pushing the green start switch.

Connect the air tank to the high-pressure fill hose using a 1/8 inch quick-connect adaptor, making sure the connection is tightened firmly

After all preliminary "START-UP" procedures have been completed, push the green button to start air compression and tank filling. The compressor will run until the desired PSI has been achieved. Once the compressor shuts off, close the air tank and bleed out the excess air using the release valve near the bottom of the compressor. Let radiator run for another 5 minutes in order to cool the piston chamber completely. Do not switch off the entire compressor until this cool-off period has elapsed. Be sure to release all compressed air from the hose before removing the adaptor from the gun or tank.

Do not fill air tanks above 4500 psi, as the burst disc is set to 4800 psi. If the burst disc bursts, there are spares discs which can be easily replaced.

The compressor can run continuously for a maximum of 8 hours.

Filling times can vary depending on ambient conditions, such as, temperature, humidity and altitude. General fill times are approximately 35-45 minutes for a 12 cf tank from empty to 4500 PSI and 3.5 to 4.00 hours for a 75 cf tank from empty to 4500 psi.

When filling tanks, open the manual air/water control knob every 15 -20 minutes of compressor operation , more often for high humidity days.

DO NOT OVERFILL AIR CYLINDERS OR GUN AIR TANKS, AS THIS CAN CAUSE SERIOUS INJURY OR DEATH. PLEASE, ALWAYS USE COMMON SENSE WHEN USING HIGH PSI COMPRESSORS, AS THIS IS THE END-USER'S RESPONSIBILITY.

Additional Notes for Optimum Use:

Compressor should be operated on a smooth flat surface. DO NOT operate or store in dusty, humid conditions, or below 45° F.

For long term storage, drain water tank and gently blow compressed air through water lines or suck out the water using a Dry-vac. Keep compressor covered.

It is normal to hear a "rocking or tapping" sound.

Maintenance

Check radiator fluid before each use and change when needed. Use non-distilled purified water, regular anti-freeze and Purple Ice when refilling the radiator. Add 1/2 ounce of Purple Ice and 1 ounce of Anti-freeze to the radiator chamber first with the remaining balance of fluid being non-distilled purified water. **Keep maximum radiator fluid level 1/2 inch below the water output. DO NOT USE DISTILLED WATER. Only use Renewable Lubricants E.P Grease #0 for the upper cylinder piston lubrication.**

Troubleshooting:

Compressor not "ON" (no lights)

- Make sure there is power at the electrical outlet.
- Make sure cord is pushed all the way into electrical outlet socket on the main compressor.
- Make sure the red circuit breaker has not tripped.
- Take off front panel and check for any loose wires. Due to unfortunate roughness during shipping, wires may become loose or undone.

Compressor is not running but lights are "on"

This may be an indicator that there might be some loose wires.

The gauge has been set very low.

The red off button is stuck (you should hear and feel the switch clicking).

Compressor Not Building Pressure:

- Make sure bleed screw is hand tightened. DO NOT USE TOOLS. As the PSI climbs, check for tightness.
- Check burst disc for damage. If damaged, replacement disc is located in maintenance bag. Tighten to about 5 ft. lbs. The disc is under the 14mm brass fitting on top of the compressor.
- Check High Pressure Check Valve. Clean or replace, if damaged. Use tweezers to take out old check valve , replacement check valve is in maintenance bag . Put in new check valve and make sure spring is placed small end down. Tighten fitting. Its located under the 19mm brass fitting.
- Spray soapy water on all airline connectors; tighten if necessary, even on air/water separator. Be careful not to spray onto the electrical components.
- The majority of leaks are at the compressor fill hose or the customers hose, gauges and fill tanks.
-
-

No water flow:

- Make sure there is water in the compressor radiator reservoir

Check for 12 volts at the water pump electrical connections.

- If there is 12 volts-- water pump is bad.

Disconnect a upper water line while water pump is running, it helps purge air out of the system or rock compressor side to side.

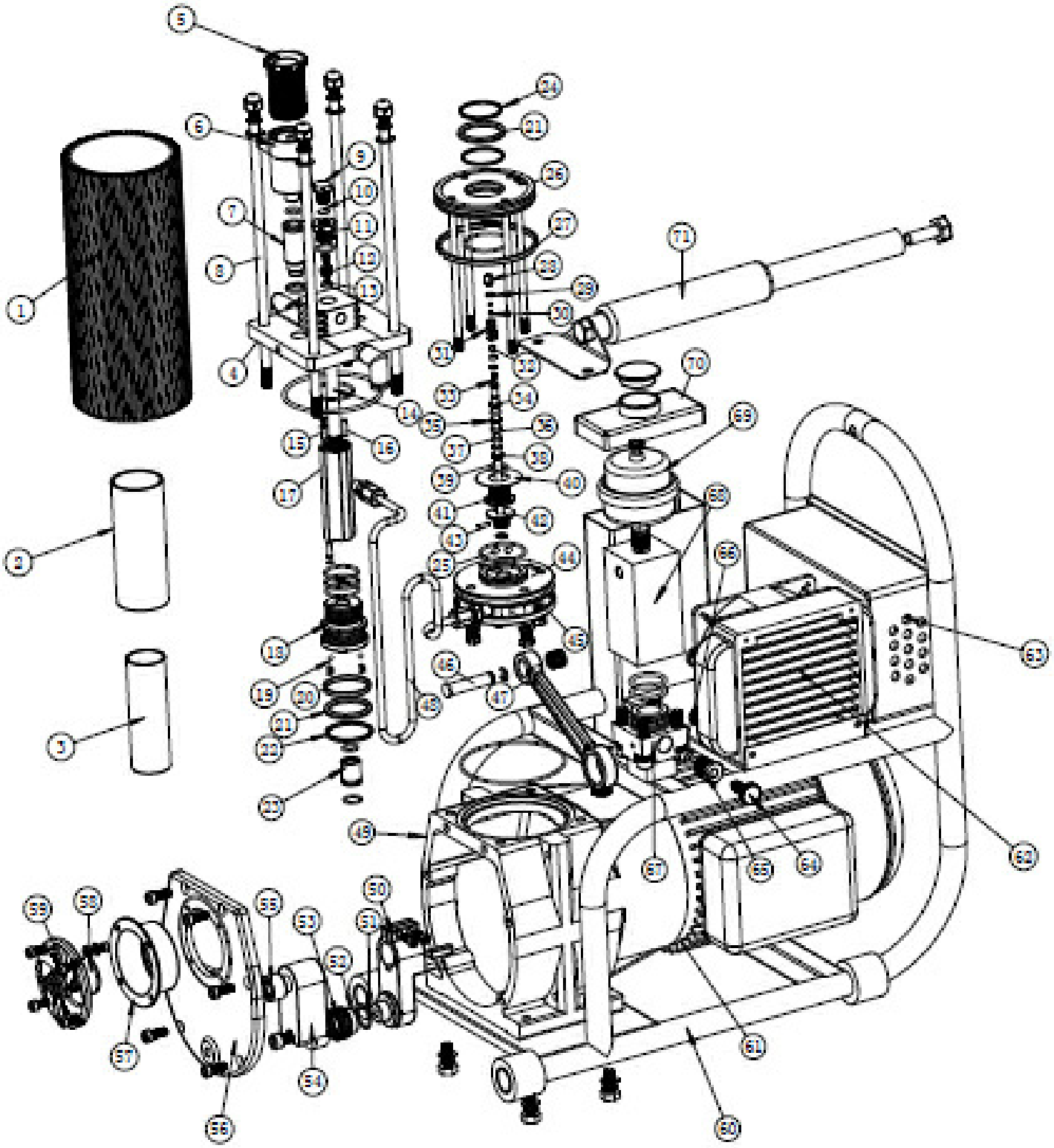
1
2
3
4
5
6
7
8
9
10
11
12
13
14
15
16
17
18
19
20
21
22
23
24
25
26
27
28
29
30
31
32
33
34
35
36
37
38
39
40
41
42
43
44
45
46
47
48
49
50
51
52
53
54
55
56
57
58
59
60
61
62
63
64
65
66
67
68
69
70
71

NO	NAME	NO	NAME
1	level 1 cylinder sleeve	37	inner sealed ring
2	level 2 cylinder sleeve	38	locating pad
3	level 3 cylinder sleeve	39	high pressure pole
4	cylinder seat	40	oil-way catch
5	grease port	41	sealing seat
6	grease port seat	42	high pressure pole fixed seat
7	oil column	43	3mm pin
8	cylinder bolt	44	fixed seat at bottom
9	burst nut	45	35*6 guide ring
10	burst disc	46	Connecting rod pin
11	burst nut seat	47	Connecting rod
12	check valve	48	high pressure air pipe
13	check valve gasket	49	crankshaft box
14	high pressure pipe	50	crankshaft
15	oil-way connect pipe	51	shaft sleeve pad
16	oil-way locating pin	52	bearing sleeve
17	oil-way liner	53	needle roller bearing
18	level 2 piston	54	crankshaft rack
19	8mm rubber ball	56	4900 needle roller bearing
20	Level 2 cylinder piston guide ring	56	crankshaft box cover
21	Level 2 cylinder piston sealing ring	57	Air intake filter cover
22	Level 2 cylinder piston sealing ring	58	valves
23	Level 2 cylinder piston thread nut	59	crankshaft box cover
24	Level 2 cylinder piston guide ring	60	rack
25	7mm rubber ball	61	motor
26	fixed panel	62	water tank
27	35*4 guide ring	63	control box
28	High pressure piston cover	64	bleed valve
29	High pressure piston gasket	65	bleed valve nut
30	High pressure valve core	66	bleed valve gasket
31	sealed ring outside	67	filter cover
32	high pressure piston sealing ring	68	filter body
33	high pressure piston body	69	pressure gauge
34	stop ring	70	water tank cover
35	Cone pad	71	handle
36	rubber sleeve		

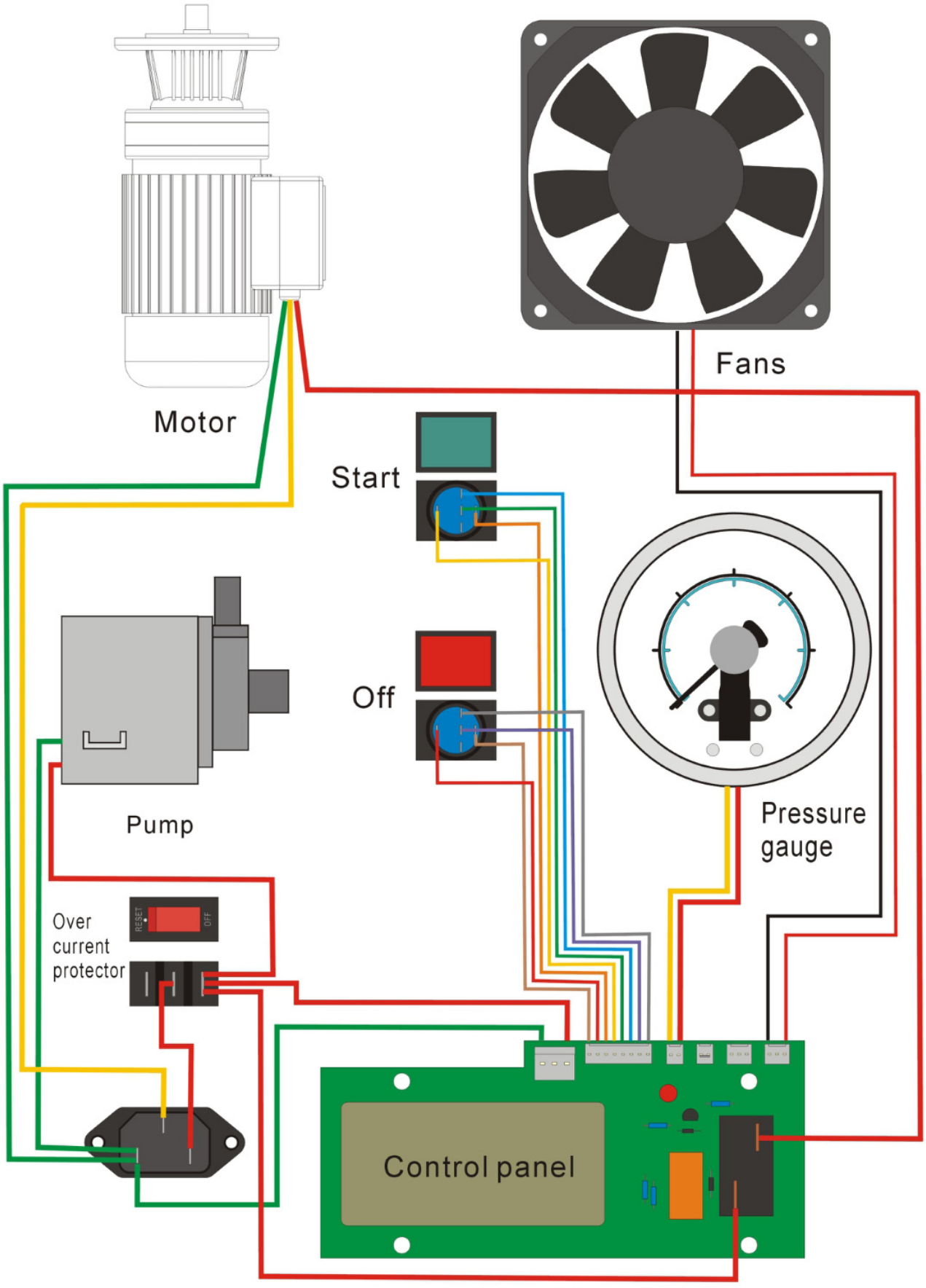
Motor
Fans
Start
Off
Pump
Pressure gauge
Over current protector
RESET
OFF
Control panel

Maintenence Parts List

1. Level 2 cylinder piston guide ring	12. rubber ball
2. Level 2 cylinder piston sealing ring	13. High pressure valve core
3. Level 2 cylinder piston guide ring	14. φ 3 spring
4. Level 2 cylinder sealing ring	15. φ 4-φ 7 pagoda spring
5. Level 2 cylinder piston sealing ring (up)	16. check valve gasket
6. Level 2 cylinder piston sealing ring (down)	17. Burst disc
7. Level 2 cylinder piston sealing ring	18. Sealing gasket of bleed valve
8. Level 2 cylinder piston sealing gasket	19. Nozzle Cleaner
9. High pressure piston sealing ring	20. special spanner
10. High-pressure piston sealing gasket	21. 7mm allen wrench
11. sealed ring outside	

RAPTOR PNEUMATICS, LLC ONE YEAR RETAIL LIMITED WARRANTY

RAPTOR PNEUMATICS, LLC (RP) warranties to the original consumer of this product that it will be free from workmanship and material defects based upon normal usage during the time of the warranty, or 12 months from the date of purchase. This warranty covers the, materials, labour and parts needed to repair.rebuild or replace the faulty part or equipment, at RP's option, for a period of one (1) year (shipping not included). The warranty period commences from the date on which the original buyer purchases the equipment. This limited warranty covers manufacturing defects that occur during the warranty period. RP will, at its discretion, repair, rebuild or replace the faulty part or equipment in accordance with the terms set forth below. If the customer chooses to repair the problem at their home or facility, then thedamaged part must first be returned to RP and then a replacement part will be shipped out, at the customer's expense, to the address that the customer specifies.

Warranty Terms

During this 12 month warranty period, the product will be repaired, rebuilt, or replaced at no charge to the consumer, when returned to RP with the sale receipt or invoice (containing date of purchase)according to the following terms. This warranty covers the, materials, labour and parts needed to repair, rebuild or replace the faulty part or equipment, at RP's option, for a period of one (1) year (shipping not included). This owner's limited warranty is only valid, if the item is used in an environment approved by RP for that particular equipment. The warranty is invalid if the product has been misused, abused or damaged from causes not arising out of defects in material or workmanship. RP cannot be held responsible for any subsequent damages to the machine or to the user's human body that may arise from use of this unit after the defect or damage has occurred. This owner's limited warranty applies to the EZ-FILL 4500 PCP, Paint Ball or Scuba Compressor. Warranty repairs will not extend the warranty period.

Warranty Restrictions

This owner's warranty only covers the following:

a. Flaws caused by materials or labour in the equipment that existed when the equipment was originally assembled.

b. Faults that occur in normal use as defined in the owner's manual and providing that RP's instructions on start-up, maintenance and use have been followed.

c. The original purchaser of the equipment who holds an original proof of purchase.

(Continued)

ALL RIGHTS RESERVED
Copyright and Trademark 2014 Raptor Pneumatics, LLC

This warranty does not extend to or cover any of the following

a. Equipment or components that have been modified without the consent of RP.

b. Faults resulting from natural wear and tear, use in conditions for which the equipment is not intended, corrosion, or damage incurred during loading or shipping not provided by RP, or by accident, fire, flood, war or acts or God.

c. Maintenance activities, such as cleaning, lubricating, or normal checking of parts: or installation procedures that customers can do themselves.

d. Damage or equipment failure caused by faulty electrical wiring used to power the equipment.

(i) electrical wiring not in compliance with applicable electrical codes.

(ii) electrical wiring not in compliance with the owner's manual or

(iii) electrical wiring that has not been maintained as outlined in the owner's manual.

e. Repairs performed by someone other than an authorized RP representative.

f. Repairs due to limitations or corrections in the equipment's software.

g. Repairs to consumable or cosmetic items, e.g., grips, seals, labels, or wheels.

h. Repairs performed on equipment missing a serial number or with a serial tag that has been altered or removed.

i. Service calls to correct installation of the equipment or instruct owners on how to use the equipment. j.

Pick-up, delivery, or freight charges involved with repairs.

RP MAKES NO EXPRESS WARRANTIES OR CONDITIONS BEYOND THOSE STATED IN THIS OWNER'S WARRANTY. RP DISCLAIMS ALL OTHER WARRANTIES AND CONDITIONS, EXPRESS, OR IMPLIED, INCLUDING WITHOUT LIMITATION IMPLIED WARRANTIES AND CONDITION OF MERCHANTABILITY AND FITNESS FOR A PARTICULAR PURPOSE. SOME STATES (OR JURISDICTIONS) DO NO ALLOW LIMITATIONS ON IMPLIED WARRANTIES OR CONDITIONS, SO THIS LIMITATION MAY NOT APPLY TO THE USER OR OWNER.

RP'S RESPONSIBILITY FOR MALFUNCTIONS AND DEFECTS IN THE EQUIPMENT IS LIMITED TO REPAIR AND REPLACEMENT AS SET FORTH IN THIS OWNER'S WARRANTY. THESE WARRANTIES GIVE THE USER OR OWNER SPECIFIC LEGAL RIGHTS, AND THE USER OR OWNER MAY ALSO HAVE OTHER RIGHTS, WHICH VARY FROM STATE TO STATE (OR JURISDICTION).

RP DOES NOT ACCEPT LIABILITY BEYOND THE REMEDIES SET FORTH IN THIS WARRANTY STATEMENT OR LIABILITY FOR INCIDENTAL OR CONSEQUENTIAL DAMAGES. SOME STATES (OR JURISDICTIONS) DO NOT ALLOW THE EXCLUSION OR LIMITATION OF INCIDENTAL OR CONSEQUENTIAL DAMAGES, SO THE PRECEDING EXCLUSION OR LIMITATION MAY NOT APPLY TO THE USER OR OWNER

Despite continuous quality control, faults or operating errors in equipment may result from individual components. Delivering the complete piece of equipment for repair is often unnecessary, because the flaw can usually be fixed by replacing just the faulty part. It is preferable that you make any inquiries about the warranty directly to your RP retailer or to RP directly.

Please contact the store where you purchased your compressor or call:

Airguns of Arizona, 1970 W. Elliot Rd, Suite 109 Gilbert AZ 85233 480.461.1113

www.airgunsofarizona.com, Email: mail@airgunsofariona.com

We at RP want to develop our products and services continuously according to the needs and wishes of our customers. For this reason, we kindly ask you to complete the registration card and send it to us as soon as possible, preferably within ten days of purchasing the equipment. If registration is intended, it must be made within two (2) months of the date of purchase. Please fill in all the fields to ensure that we can serve you as efficiently as possible.

PLEASE COMPLETE AND MAIL BACK TO:

RAPTOR PNEUMATICS, LLC

209 S. Stephanie St. #B-110

Henderson, NV 89021 USA

Registration Card

Name of Owner: _____

Address: _____

City, State: _____

Zip Code: _____

Phone Number: _____

Serial Number: _____

Date of Purchase: _____

Place or Purchase: _____

Purchaser's Signature: _____

ALL RIGHTS RESERVED

Copyright and Trademark 2014 Raptor Pneumatics, LLC